Name _____ Class _____ Date _____

Concept-Development Practice Page **6-5**

Equilibrium on an Inclined Plane

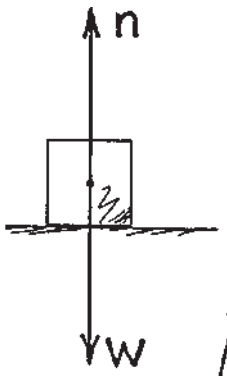

1. The block is at rest on a horizontal surface. The normal support force **n** is equal and opposite to weight **W**.

   a. There is (friction) (no friction) because the block has no tendency to slide.

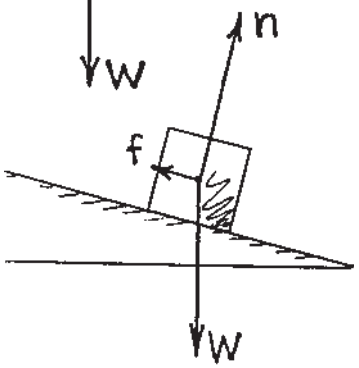

2. At rest on the incline, friction acts. Note (right) the resultant **f + n** (dashed vector) is equal and opposite to **W**.

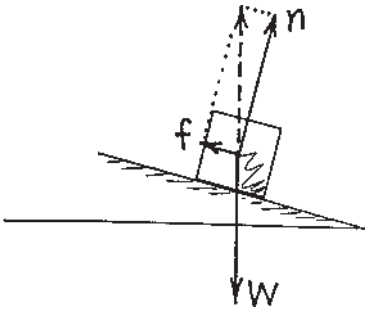

   a. Here we see that the size of **n** is (less than) (equal to) (greater than) the size of **W.**

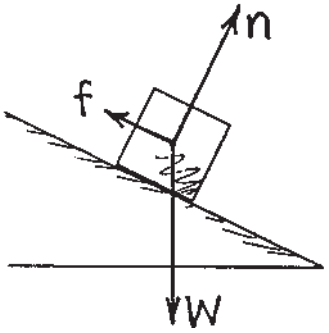

3. Draw the resultant **f + n** for the block at rest on the steeper incline.

   a. The resultant magnitude of **f + n** is (less than) (equal to) (greater than) the magnitude of **W**.

   b. As the angle of the incline increases, the magnitude of vector **n** (decreases) (stays the same) (increases).

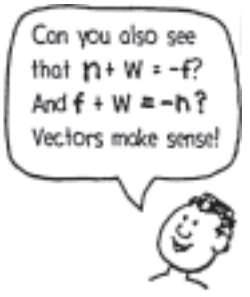

4. The block remains at rest on the still steeper incline. Draw vectors for equilibrium.

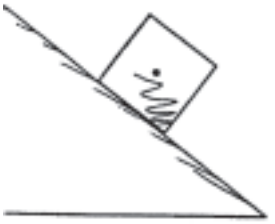

   a. How does the resultant **f + n** compare to **W**?

   _____

   b. Suppose the angle is increased and the block slides down the incline at constant velocity. Then the net force on the block is (zero) (greater than zero). If the angle is increased even further, then acceleration (occurs) (doesn't occur).

5. Further steepness of the incline means (less) (more) acceleration down the plane. When the incline is vertical, acceleration is (less than *g*) (*g*) (more than *g*).

CONCEPTUAL PHYSICS

Force-Vector Diagrams

In each case, a rock is acted on by one or more forces. Draw an accurate vector diagram showing all forces acting on the rock, and no other forces. Use a ruler, and do it in pencil so you can correct mistakes. The first two are done as examples. Show by the parallelogram rule in 2 that the vector sum of **A + B** is equal and opposite to **W** (that is, **A + B = -W**). Do the same for 3 and 4. Draw and label vectors for the weight and normal forces in 5 to 10, and for the appropriate forces in 11 and 12.

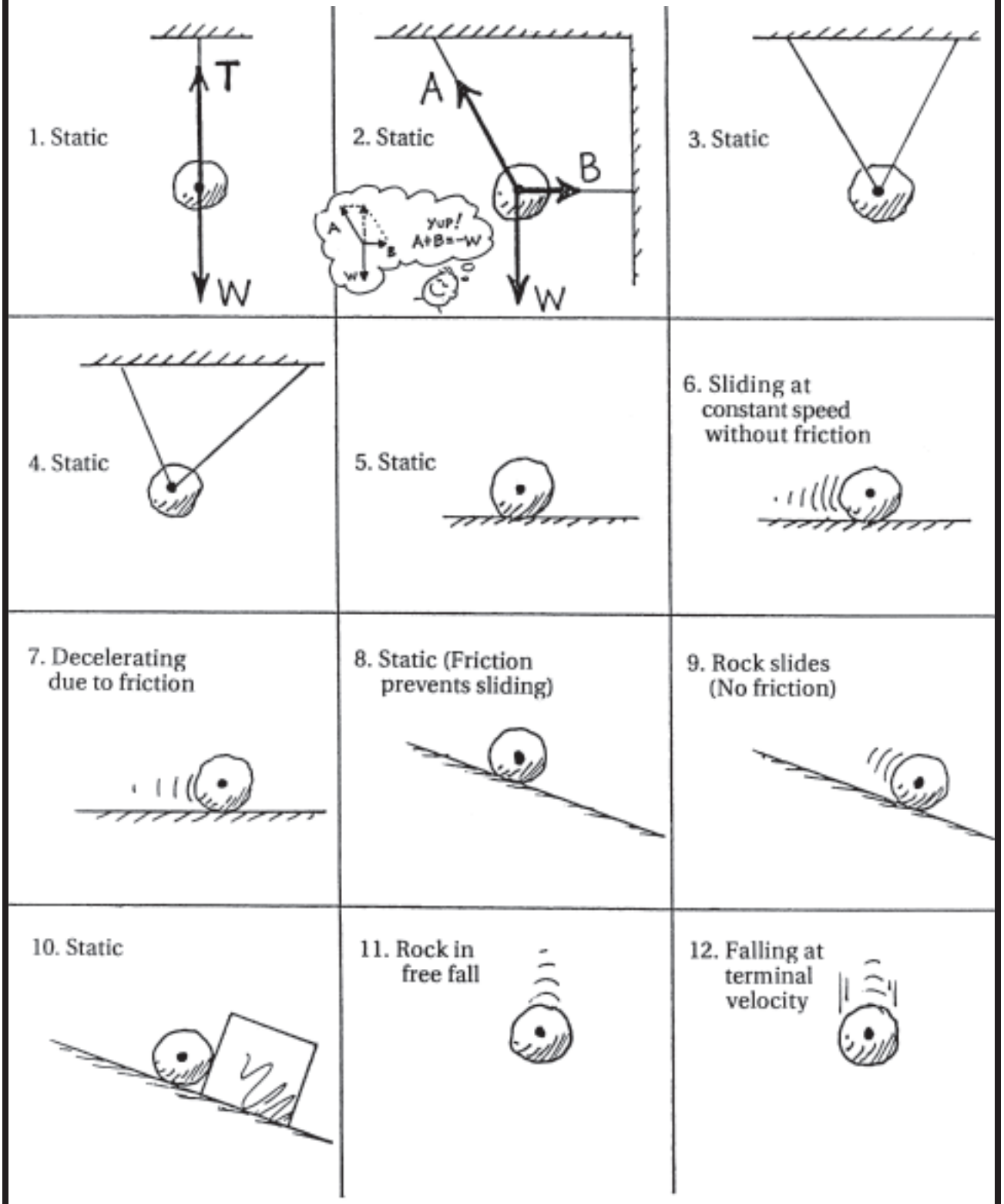

CONCEPTUAL PHYSICS

thanx to Jim Court